OPERATOR'S MANUAL

MODEL 603A BACKHOE

FOR

SIMPLICITY
4040
4041
POW'R MAX
AND
9020
TRACTORS

brantly mfg. co.

P. O. Box 187 73542 405-335-3812

Frederick, Oklahoma

INTRODUCTION

This Manual provides operation, maintenance, lubrication instructions for your **603A** Backhoe.

Your **603A** Backhoe has been designed to give you many years of satisfactory service. Although the **603A** has been manufactured to meet rugged, tough work conditions, its successful operation and long life depends, of course, on proper operation and the care given it. This manual is designed to provide the necessary information for you to care for your new Backhoe. Please read it carefully prior to mounting the **603A** on your tractor and before operation.

TABLE OF CONTENTS

Introduction	Page 1
Safety Precautions	Page 2
Specifications	Page 3
Operating Instructions	Page 4,5,6
Trouble Shooting	Page 7
Maintenance	Page 7
Hydraulic Cylinder Maintenance	Page 8
Cylinder Assembly Drawing	Page 9
Mounting Instructions	Page 10
Main Assembly Drawing	Page 11
Control Valve Maintenance	Page 12
Control Valve Assembly Drawing	Page 13
Pump Assembly	Page 14
Bucket Assembly	Page 15
Boom Assembly	Page 16
Mainframe Assembly (Lower)	Page 17
Mainframe Assembly (Upper)	Page 18
Stabalizer Assembly	Page 19
Hose and Valve Assembly	Page 20
Warranty	Back Cover

BACKHOE SERIAL NUMBER REQUIRED ON ALL PARTS ORDERS.

SAFETY PRECAUTIONS

BACKHOES, IF NOT USED PROPERLY, CAN BE DANGEROUS. THE OPERATOR, THEREFORE, SHOULD DEVELOP SAFE AND EFFICIENT WORKING HABITS ALWAYS BEING AWARE OF HAZARDOUS CONDITIONS. A CAREFUL AND WELL TRAINED OPERATOR IS THE BEST INSURANCE AGAINST ACCIDENTS.

PAY CLOSE AND STRICT ATTENTION TO THE JOB AT HAND.

KEEP ALL OTHER PERSONS CLEAR OF WORK AREA.

KNOW YOUR EQUIPMENT AND ITS CONTROLS.

ALWAYS CHECK THE AREA AROUND YOU TO ASSURE SAFE OPERATION BEFORE MOVING EQUIPMENT.

DO NOT ALLOW OTHERS ON, OR NEAR, THE EQUIPMENT WHEN IN OPERATION.

TO PREVENT UPSETS, BE CAREFUL WHEN SWINGING A LOADED BUCKET ON A HILLSIDE.

ALWAYS REMAIN ON THE TRACTOR, AT THE CONTROLS, WHEN TRACTOR ENGINE IS RUNNING. LOWER BUCKET AND BOOM, STOP ENGINE, REMOVE IGNITION KEY WHEN NOT ON THE TRACTOR.

NEVER DRIVE A TRACTOR EQUIPPED WITH BACKHOE OR LOADER DOWN A HILL STEEPER THAN FIFTEEN (15) DEGREES.

NEVER USE HYDRAULIC POWER OF BOOM OR DIPPER AS A PULLING OR LIFTING DEVICE.

NEVER USE ANY PART OF THE BACKHOE ASSEMBLY AS A TIE POINT FOR PULLING OR LIFTING.

AVOID SUDDEN STARTS, EXCESSIVE SPEED, AND SUDDEN STOPS.

PRACTICE SMOOTH, EVEN TRANSFER OF LOADS AND OF OPERATION. SUDDEN JERKY MOVEMENTS ARE DANGEROUS TO EQUIPMENT AND PERSONNEL.

CHECK HYDRAULIC SYSTEM BEFORE EACH USE FOR SIGNS OF LEAKS OR WEAR. ESCAPING HYDRAULIC FLUID, UNDER PRESSURE, CAN BE DANGEROUS. (Hydraulic fluid escaping under pressure can have enough force to penetrate the skin or to destroy eye-sight. Hydraulic fluid may also infect a minor cut or opening in the skin. If injured by escaping fluid, get medical attention at once.) MAKE SURE ALL CONNECTIONS ARE TIGHT AND THAT HOSES ARE IN GOOD CONDITION BEFORE APPLYING PRESSURE TO THE SYSTEM. RELIEVE ALL PRESSURE BEFORE DISCONNECTING THE LINES OR PERFORMING OTHER WORK ON THE HYDRAULIC SYSTEM. TO LOCATE SMALL LEAKS, USE A SMALL PIECE OF PAPER, CARDBOARD, OR WOOD.....NEVER USE YOUR HANDS.

USE EXTREME CARE WHEN WORKING CLOSE TO FENCES, DITCHES, OR ON HILLSIDES.

CHECK CLEARANCE CAREFULLY BEFORE DRIVING UNDER ELECTRIC LINES, BRIDGES, OR BEFORE ENTERING OR LEAVING A BUILDING.

KEEP EQUIPMENT CLEAN. THIS WILL NOT ONLY ALLOW YOU TO MORE READILY OBSERVE ANY SIGNS OF EQUIPMENT WEAR OR IMPENDING FAILURE, BUT WILL ALSO HELP IN AVOIDING FALLS DUE TO SLIPPING ON GREASE OR OIL.

NEVER EXCEED THREE (3) MILES PER HOUR (1.8642 Km/Hr) EXCEPT WHEN TRAVELING OVER GOOD, SMOOTH ROADS WITH EQUIPMENT IN ROAD-TRAVEL CONDITIONS.

KEEP HANDS, GLOVES, CLOTHING AWAY FROM MOVING PARTS. AVOID LOOSE-FITTING CLOTHING.

— Do Not Hurry! —

Specifications

Operating Criteria: Ref. Figure 1

Digging Depth:	6.0 ft. (182.9 cm)
Digging Radius:	9.0 ft. (274.3 cm)
Bucket Clearance:	6.0 ft. (182.9 cm)
Swing Radius:	135 Degrees

Hydraulic System:

Type:	P.T.O. Driven Pump
Operating Pressure:	1800 P.S.I.
Boom Cylinder:	22½" (55.88 cm) by 2.0" (5.08 cm) with 1 1/8" (2.86 cm) Piston Rod
Crowd Cylinder:	16" (40.64 cm) by 2.0" (5.08 cm) with 1 1/8" (2.86 cm) Piston Rod
Bucket Cylinder:	10" (25.4 cm) by 2.0" (5.08 cm) with 1 1/8" (2.86 cm) Piston Rod
Swing Cylinder:	6" (15.24 cm) by 2½" (6.35 cm) with 1 1/8" (2.86 cm) Piston Rod
Stabilizer Cylinder:	10" (25.4 cm) by 1½" (3.81 cm) with 3/4" (1.91 cm) Piston Rod
Control Valve:	Stacked, 6 Handle, Bi-directional

Cycle Times:

Bucket Open:	3.5 sec.
Bucket Closed:	4.5 sec.
Dipper Open:	2.5 sec.
Dipper Closed:	3.0 sec.
Boom Up:	6.0 sec.
Boom Down:	4.5 sec.
Boom Right:	3.0 sec.
Boom Left:	3.0 sec.

Weights:

603A Backhoe:	490 lbs. (222.5 kg)
P603 Pump Kit:	32 lbs. (14.5 kg)
615 8" Bucket:	21 lbs. (9.5 kg)
615A 13" Bucket:	30 lbs. (13.6 kg)
615B 16" Bucket:	35 lbs. (15.9 kg)

Optional Equipment:

8 Inch Bucket
13 Inch Bucket
16 Inch Bucket
4 Handle Control Valve Assembly (Two Bi-directional, Four Quadra-directional) Special Order Only.

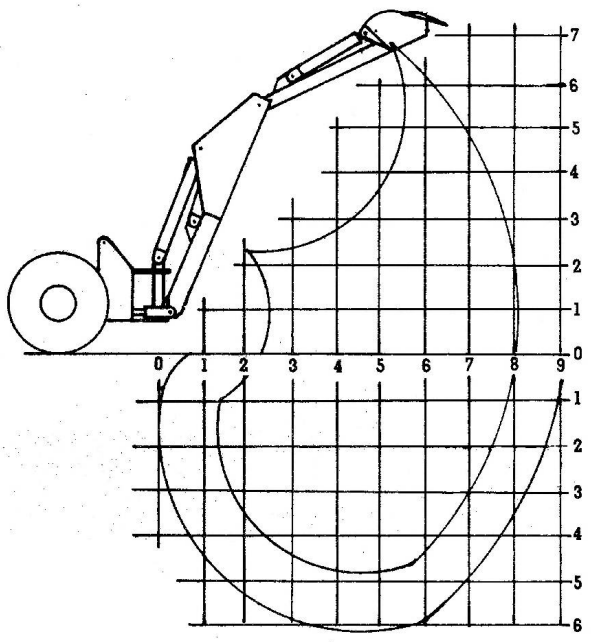

(Design and Specifications subject to change without notice.)

OPERATING INSTRUCTIONS

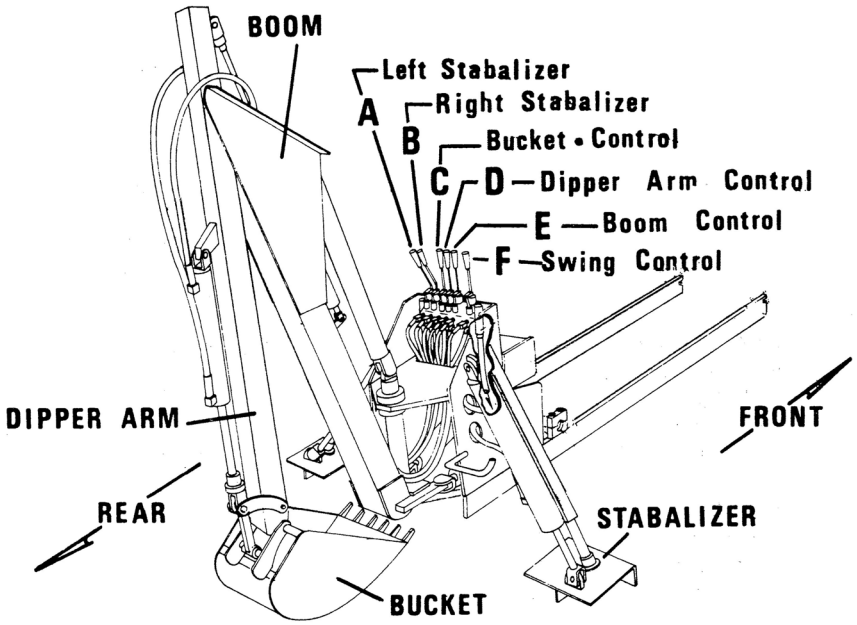

!! KNOW YOUR CONTROLS !!

LEVER DESCRIPTION	REF.	OPERATING HANDLE	
		TOWARD FRONT	TOWARD REAR
Left Stabalizer	A	Raises Left Stabalizer	Lowers Left Stabalizer
Right Stabalizer	B	Raises Right Stabalizer	Lowers Right Stabalizer
Bucket Control	C	Opens Bucket	Closes Bucket
Dipper Arm Control	D	Closes (Crowds) Dipper Arm	Opens (Extends) Dipper Arm
Main Boom Control	E	Raises Main Boom	Lowers Main Boom
Boom Swing Control	F	Swings Boom Right	Swings Boom Left

Any Equipment, Improperly Used, Can Be Dangerous !

NOTE:

SAFE AND EFFICIENT OPERATION OF YOUR NEW BACKHOE WILL DEPEND, FOR THE MOST PART, ON BECOMING PROFICIENT WITH ITS OPERATION. TIME SPENT, IN BECOMING FAMILIAR WITH ITS CONTROLS, WILL PAY BIG DIVIDENDS IN LONGER EQUIPMENT LIFE, FASTER WORK PERFORMANCE, AND POSSIBLY, AVOIDING INJURY.

Operation of the Backhoe is straight forward, following natural tendencies. (Forward to raise or close, backward to lower or open.) Practice with the equipment so that operation is performed as smoothly, as quickly, and with as little wasted motion as possible. It is in avoiding wasted motion that you will save in equipment wear and time lost in job performance.

For maximum power, it is best to shift the Tractor speed shift lever (if Tractor is so equipped) into the low speed range.

The Tractor Throttle should be initially set at approximately 30% of full range. Due to the efficiency of the hydraulic pump, it is not necessary to "race" the engine to assure proper performance. The type of work load, soil conditions, etc., may require raising the speed slightly or may allow decreasing the speed slightly.

General operation of the Control Levers is recapped in the Table on Page 4 and should be carefully studied, and practiced, prior to actual use of the equipment in a work situation.

For initial set-up of the equipment, back Tractor into position with the center line of the Tractor and Backhoe along a line in the general direction in which you wish to dig. Stop the Tractor with the mainframe of the Backhoe approximately five to seven feet (1.52 to 2.13 meters) from the point you wish to start digging. Keep in mind that the edges of the hole you wish to dig will slope toward the center at both front and rear so that deepest part of the hole will be slightly forward, depending on depth, from the point at which you start digging.

Operate Control Levers (A) and (B) toward the rear to lower Stabalizers. Stabalizers should be lowered until they start to "lift" the Tractor. (The weight of the Tractor will assure that Stabalizers stay firmly seated.)

To begin digging, operate Control Lever (D) toward the rear to open the Dipper Arm until Bucket is poised over the point at which you wish to start digging. (It may be necessary to operate Lever (E) toward rear to lower Main Boom for adequate "reach".) Now operate Control Lever (C) to position Bucket almost parallel to the ground, but tilted slightly so that it will "dig". (Too little "tilt" will cause the Bucket to "skate" across the top of the ground; too much "tilt" will cause it to drag or "bog" down.)

Now operate Lever (D) forward slowly (adjusting Lever "E" to raise or lower Boom thus adjusting digging depth) and operating Lever (C) to control "tilt" of Bucket. Gradually bring Bucket toward you until full. Proper interaction of Levers (C) and (D) is critical to efficient filling of the Bucket with the least amount of effort and time. Close Bucket by pushing Lever (C) full toward the rear.

Operate Lever (E) forward to raise the Main Boom until Bucket is clear of ground obstacles (sides of trench, piles of dirt, etc.). It may be necessary to extend Dipper Arm to achieve necessary clearance. Normally the Dipper Arm will need to be extended, anyhow, to allow for deposit of material well away from the digging area.

Operate Lever (F) to "Swing" Main Boom right of left, depending on the area selected for deposit of material, until Main Boom is in line with the deposit area. Now, fully extend the Dipper Arm, for maximum reach or until Bucket is positioned over deposit area. Open Bucket and "dump" material.

Swing Main Boom in reverse direction to bring back in line with digging area, close Dipper Arm, and position Bucket for best digging position. Lower Main Boom and repeat the process already performed in initially filling the Bucket.

When finished, close Bucket, close Dipper Arm, raise Main Boom to full height, raise Stabalizers to full height, and the Backhoe is ready for road travel. Swing (or swivel) seat so that you are in position to safely operate the Tractor and drive away from work area. It should be noted that no attempt should be made to operate the Backhoe from the ground or from the Tractor seat facing forward. Steps are provided as an integral part of the Backhoe so that the operator can adequately brace himself during operation of the Backhoe.

Again, be especially careful when operating on a slope or hillside, close to fences, buildings, telephone or power lines, or in any other tight situation. Remember that the raised Boom projects well above your eye level when seated on the Tractor and special precautions should be taken when entering or leaving a building or driving under any overhead obstruction.

It is assumed that the operation of the Tractor will have been mastered prior to attempts to use the Tractor in conjunction with any other item of equipment. Careful study of the Tractor Manufacturer's Operators Manual will assure not only safe, efficient operation of the Tractor but will offer pointers to time and fuel savings when used in conjunction with the Backhoe or other items of equipment.

TROUBLE SHOOTING

Backhoe Will Not Operate:

Bucket is over-loaded (hooked on a rock, buried pipe, or other obstruction).

Low Hydraulic fluid level. Hydraulic fluid level in reservoir must be within one (1) inch (2.54 cm) of bottom of "Fill" cap. (All cylinders should be in retracted position.)

Hydraulic hoses assembled incorrectly. Check against Assembly Drawings on Pages 10 11 and 20.

Hydraulic pump connection to Tractor P.T.O. loose. (Check set screw tightness in spline connector between Pump and P.T.O.)

Obstruction, or blockage, in Hydraulic hoses.

Backhoe Operates Erratically:

Spline connector on P.T.O. and Pump slipping.

Hydraulic fluid level low.

Air in Hydraulic System.

MAINTENANCE

REGULAR MAINTENANCE IS THE KEY TO LONG EQUIPMENT LIFE AND SAFE OPERATION.

Every Eight (8) Hours Of Operation:

Grease all bearings and ram end of all Hydraulic cylinders. Reference is made to assembly drawings included on pages 15thru 19 For location of all grease zerts (fittings). There are two (2) located on the Bucket Assembly (page 15); eight (8) located on the Boom Assembly (page 16); eleven (11) located on the Lower Main Frame Assembly (page 17); two (2) located on the Upper Mainframe Assembly (page 18).

Control handles and linkage on the Hydraulic Value Assembly (page 20) should be oiled. S.A.E. approved multi-purpose lubricants should be used.

Make a thorough check, prior to start of work each day, for obvious signs of wear, leaks, loose fittings, etc. Careful, routine, visual checks can provide valuable forwarning of impending failures allowing sufficient time to acquire replacement parts and thus eliminating costly down time.

Every Twenty-Five (25) Hours Of Operation:

Check Hydraulic Reservoir Fluid level. If oil is low, check all lines for signs of leakage, make sure that all connections are tight. (Use a piece of cardboard or wood for checking for small leaks....don't use your hands....See Safety Precautions.) Oil level should be no lower than one (1) inch (2.54 cm) below oil "Fill" cap. If low, refill with S.A.E. Type "F" Automotive Transmission Fluid. (ALL CYLINDERS SHOULD BE IN RETRACTED POSITION.)

Every Forty (40) Hours Of Operation:

Physically check all pins, cotter pins, nuts, etc., for signs of wear or loose fit. Tighten as required, replacing any item that is badly worn. (Bolts, pins may vibrate loose during operation.) Clean equipment of all loose dirt, oil, and grease. This will assist you in visual checks for signs of wear and will help avoid costly slips.

Every Two Hundred (200) Hours Of Operation:

Hydraulic oil should be drained out of system and replaced with clean Type "F" Automotive Transmission Fluid. DO NOT CHECK OR ATTEMPT TO REPLACE LINES OR FLUID WHILE EQUIPMENT IS RUNNING OR UNDER PRESSURE.

REMEMBER.....DIRT IS DEATH TO HYDRAULICS!!

HYDRAULIC COMPONENT MAINTENANCE

GENERAL INFORMATION - Prior to attempting to repair (or disassemble) any hydraulic unit, prepare a **clean** work area. REMEMBER: **DIRT IS DEATH TO HYDRAULICS!** Seal Kits (for cylinders), when received, may contain two complete sets of seals since different cylinders were employed in manufacturing. Comparison of parts removed from your old cylinder with new parts included in Seal Kit will quickly indicate which kit is applicable. Procedures for repair that follow are applicable to either type as are associated drawings and parts list contained herein.

I. **CYLINDERS** (Ref. Assembly Drawing, Page 9.)

A. DISASSEMBLY - PROCEDURES SHOULD BE FOLLOWED STEP-BY-STEP BEGINNING WITH:

1. (a) Protect chrome finish on rod at all times.
   (b) Note: Direction of rotation for removal of lockwire depends on prior installation. Check lockwire position for correct rotation.
   (c) A sharp object, such as a small screwdriver must be used to get under the lockwire to start it out of the cylinder.
   (d) Locate spanner wrench in drilled holes in gland and rotate 360 degrees.

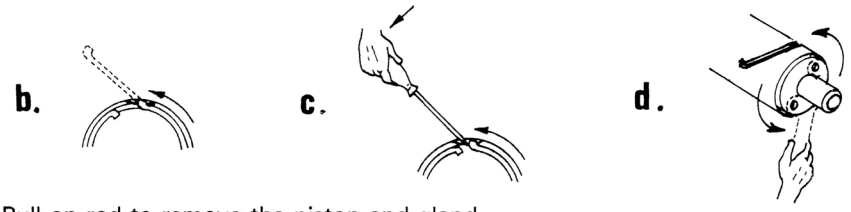

2. (a) Pull on rod to remove the piston and gland.
   (b Remove nut from end of rod.
   (c) Remember, all seals must be replaced once cylinder is disassembled.

B. CLEANING AND INSPECTION

1. Check rod and barrel bore for nicks, burrs, scratches, or rust. Slight defects may be removed with fine sand paper. Badly pitted barrel bore or rod may indicate replacement of the damaged part.

2. All parts should be thoroughly cleaned using clean solvent. Be sure to carefully clean all cavities and grooves thoroughly prior to reassembly. (Only a cleaning solvent should be used.)

C. ASSEMBLY

1. (a) Install all seals. Do not over stretch seals to facilitate easier installation.
   (b) Make sure all seals are not twisted or distorted in grooves.
   (c) Be careful not to nick or damage seals with fingernails or tools.

2. (a) Install gland on rod.
   (b) Install piston on rod "turn down".
   (c) Install locknut and torque to 150 ft. lbs.

3. (a) Lubricate all parts and inside of cylinder with hydraulic oil
   (b) Push the piston into the cylinder bore with a steady, even pressure.
   (c) Push gland into bore until shoulder or gland butts up against barrel.

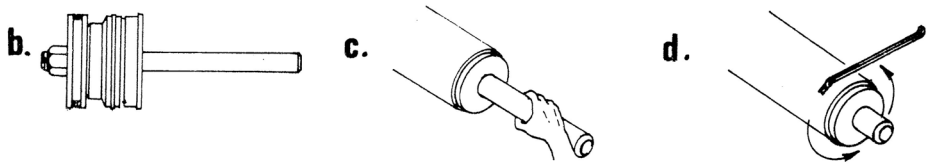

(d) Locate drilled hole in gland through milled slot in the barrel and insert lockwire. Rotate the gland 360 degrees to "feed" lockwire into "lock" position.

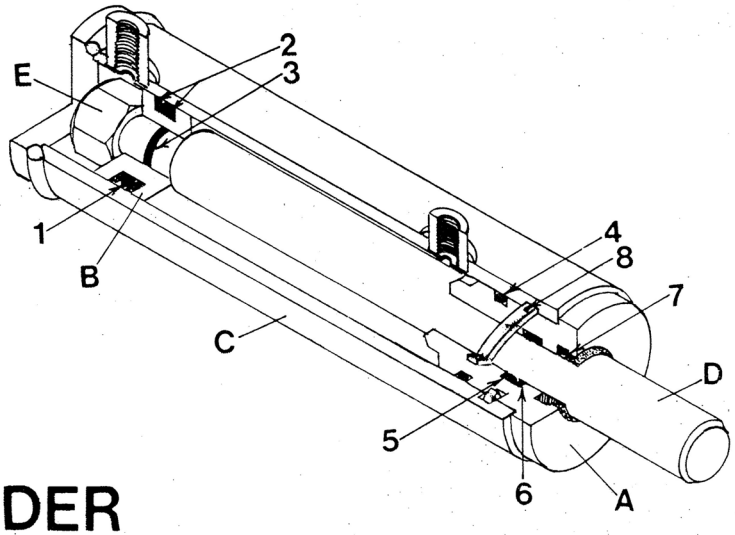

CYLINDER ASSEMBLY

ITEM	DESCRIPTION	PART NUMBER			QUANTITY PER CYLINDER
		2.50 DIA. 1.125 ROD	2.00 DIA. 1.125 ROD	1.50 DIA. 0.75 ROD	
1.	Piston Seal	1001	1010	1018	1
2.	Piston Back-up Seal	1002	1011	1019	2
3.	Rod Static Seal	1003	1003	1020	1
4.	Gland Static Seal	1004	1012	1021	1
5.	Rod Seal	1005	1013	1022	1
6.	Rod Back-up Seal	1006	1014	1023	1
7.	Rod Wiper	1007	1015	1024	1
8.	Lock Wire	1008	1016	1025	1
9.	Seal Kit (Not Shown) Includes Items 1-8 Above	1009	1017	1026	Seal Kit Required Depends On Cylinder Dia. And Rod Dia.

ITEM	DESCRIPTION	CYLINDER PART NUMBER					
		603	605	606	607	608	609
A	Gland	1027	1032	1032	1043	1038	1048
B	Piston	1028	1033	1033	1044	1039	1049
C	Barrel Assembly	1029	1034	1037	1045	1040	1050
D	Rod	1030	1035	1035	1046	1041	1051
E	Locknut	1031	1036	1036	1047	1042	1052
	Uses Seal Kit	1026	1009	1009	1017	1017	1017

BACKHOE SERIAL NUMBER REQUIRED ON ALL PARTS ORDERS.

MOUNTING INSTRUCTIONS

NOTE: (1) Right or left designations have reference to right or left side of tractor when seated facing forward.
(2) Mounting instructions assume that the Model 603A Backhoe will be used with an appropriate front end loader.

NOTE: H
is not use
used (with
be filled. T
POSITION

1. Remove 2" x 6" cross-pieces from shipping pad. Remove bolts holding 603A Backhoe to the shipping pad. (Located inside main frame, about center of pad.)

2. Cut wires holding hydraulic valve control handles into place; raise each one into position and insert pin fastening with c-ring clip provided. (Pins and c-rings are shipped inserted in appropriate holes.)

3. Mount 726 front support structure (A) onto frame of Simplicity tractor, as shown, at points (B) using 1/2" x 1 1/2" machine bolts and lockwashers provided.

4. Back tractor into place over extended arms of 603A Backhoe; manually raise arms so that notched ends fit around cross-bar on 726 front support structure at points (C). Set brake so tractor cannot roll; cut engine, remove ignition key.

5. The following items are supplied as special accessory hardware and do not necessarily appear on exploded view drawings/parts lists.
   1 ea. Hydraulic pump, type 667
   1 ea. Pump retaining arm, P/N 668
   1 ea. Hydraulic hose, 85 inch (215.90 cm) P/N 725
   1 ea. Hydraulic hose, 22 inch (55.88 cm) P/N 722
   1 ea. Hydraulic hose, 78 inch (198.12 cm) P/N 723
   1 ea. Front support structure, P/N 726

6. Slip the keyed pump shaft into splined tractor P.T.O. shaft at point (D) making sure pump retaining arm 668 fits into tractor bracket (E). (See page 14 for pump details.) Tighten set screw (F).

7. Attach 722 hose to pump pressure output (right hand port) and to 657 valve input (lower right fitting). Attach 725 hose to 657 valve output (lower left fitting) and other end to input on loader control valve. Attach 723 hose to pump suction port (left hand port) and other end to reservoir on front end loader.

8. Using small jack, or manually, raise mainframe of 603A Backhoe until holes in mounting arm (G) are aligned with holes (H) on both sides of tractor rear mainframe. Insert 1/2" x 3 1/2" machine bolts securing with hex nuts and lockwashers provided. (Additional 1/2 inch spacer bushings are provided and will be required on tractors with narrow spaced rear mounting brackets.)

9. Fill system reservoir with hydraulic oil, evacuate lines of trapped air, refilling as required to keep reservoir full. (Cylinders should be in retracted position when filling reservoir.) (Read "Trouble Shooting" and "Maintenance Procedures" again carefully on page 7 prior to operation of 603A Backhoe.)

10. Recheck all bolts, pins, hose connections to assure none have vibrated loose during shipping. Properly grease all zert locations per instructions on page 7. The 603A Backhoe should now be ready for use.

11. Remove seat bracket (provided with Simplicity tractor) from existing seat. Attach seat swivel plate assembly by attaching top plate to bottom of seat and lower plate to existing seat spring bracket assembly.

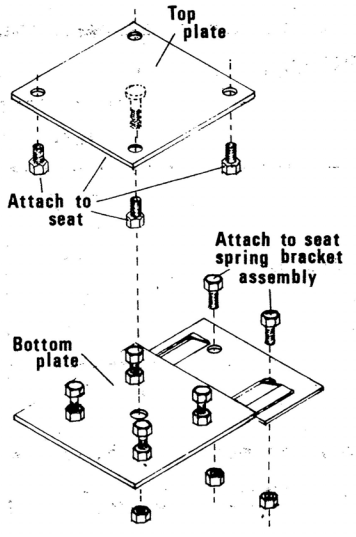

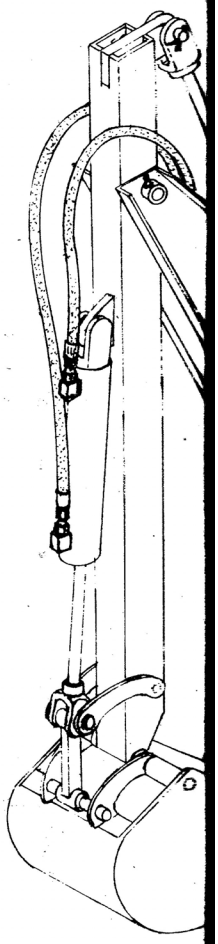

draulic reservoir must be filled prior to operation. (1) If P.T.O. pump kit **hydraulic** oil must be added to loader reservoir. (2) If P.T.O. pump kit is **out loader**), accessory reservoir special ordered with 605 Backhoe must **O FILL** RESERVOIRS, BE SURE ALL CYLINDERS ARE IN COLLAPSED **(Ref.** Maintenance Instructions, Page 7.)

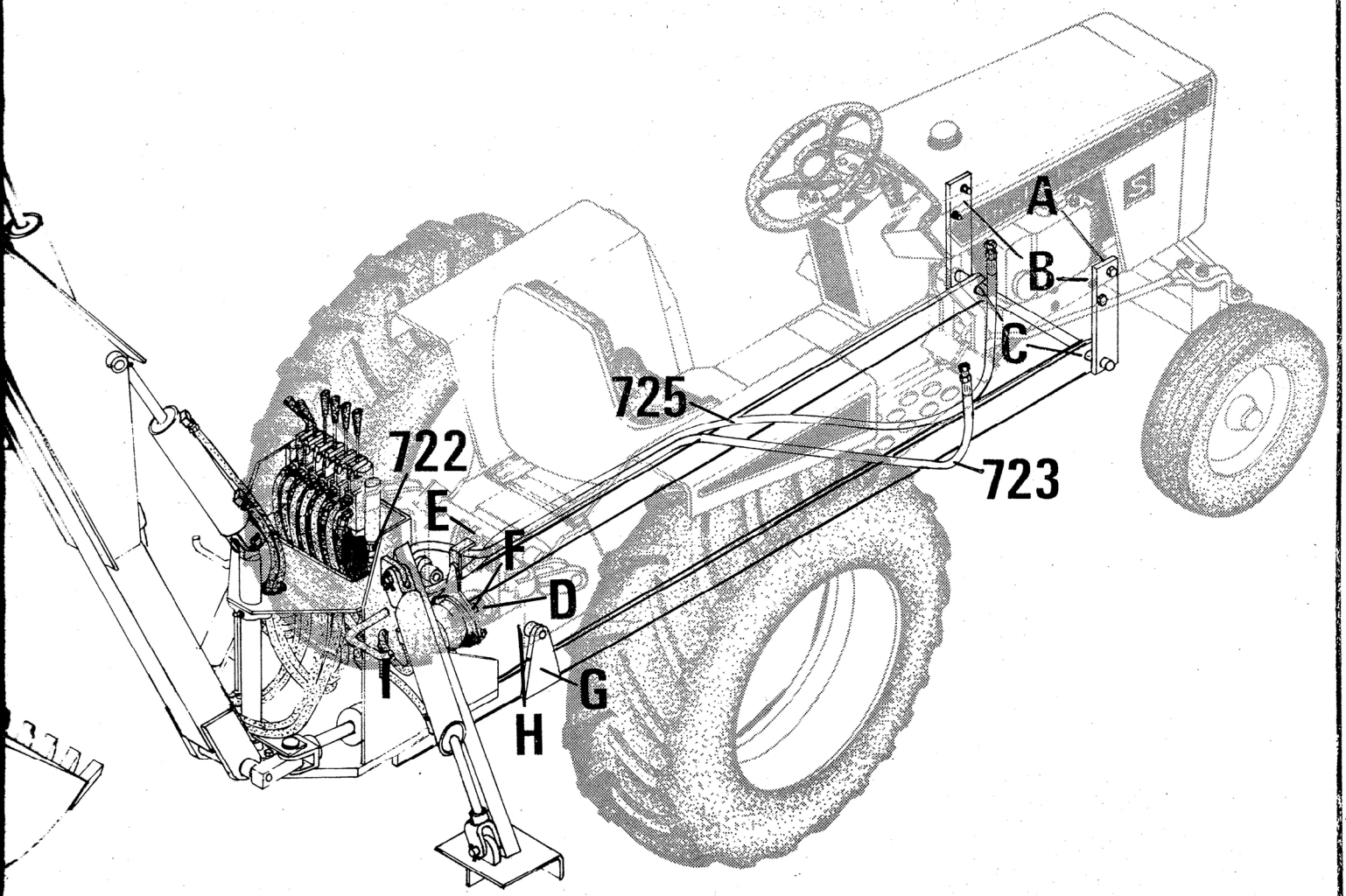

BRANTLY MODEL 603A BACKHOE

FOR

SIMPLICITY 4040, 4041, POW'R MAX, or 9020 TRACTORS

TE: Hydraulic reservoir must be filled prior to operation. (1) If P.T.O. pump kit ot used, hydraulic oil must be added to loader reservoir. (2) If P.T.O. pump kit is d (without loader), accessory reservoir special ordered with 605 Backhoe must filled. TO FILL RESERVOIRS, BE SURE ALL CYLINDERS ARE IN COLLAPSED SITION. (Ref. Maintenance Instructions, Page 7.)

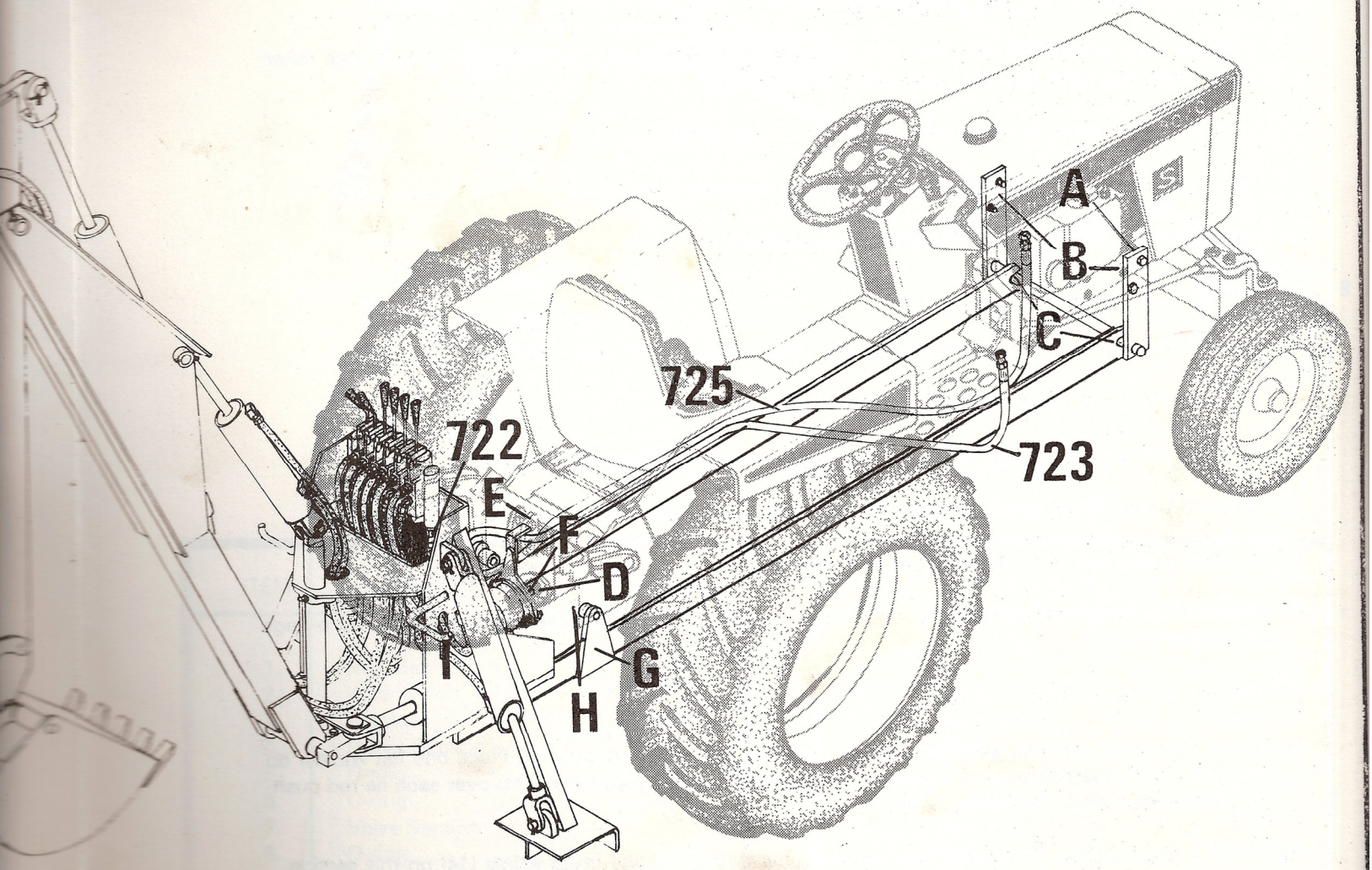

BRANTLY MODEL 603A BACKHOE

FOR

SIMPLICITY 4040, 4041, POW'R MAX, or 9020 TRACTORS

II. **CONTROL VALVES** (Ref. Assy. Drawing, Page 13)

A. DISASSEMBLY

1. Remove nuts (1), mounting bracket (3), washer (2) from inlet end of valve bank.
2. Remove inlet section (13). (Note: In between the inlet, each center valve section, and outlet are three mylar shims, one over each tie rod. Keep these shims, as they will be required during reassembly.)
3. Remove valve sections (7), one at a time, removing o-rings (5) and mylar shims (14) from between each section.
4. Remove spring cap (9) from valve section (7).
5. Remove inner spool from valve body (7) by pushing on handle end, removing from spring end. (Note: Keep body and spool together; they are a matched set.)
6. Remove o-ring (6) from inside bore on handle end of valve body (7).
7. Remove o-ring (8) by removing spring centering assembly from spool.
8. Wash all parts in **clean** solvent; dry with low pressure air hose.

B. ASSEMBLY

1. Inspect all parts for nicks, burrs, cracks, etc. Clean pipe dope or tape from ports.
2. Lubricate all parts, especially o-ring, with hydraulic oil.
3. Replace o-ring (6) in bore of body using spool in body to guide o-ring into groove.
4. Replace o-ring (8) on spool. (Note: Always make sure o-rings are not twisted in grooves.)
5. Replace spring centering assembly on end of spool. Torque to 30.0 inch pounds.
6. Replace lubricated spool in body (7) using slight twisting motion to avoid unseating or shearing o-rings (6) and (8).
7. Replace spring centering cap.
8. Install one nut on each tie rod. Place two tie rods thru the mounting bracket. Place one flat washer on third tie rod. Push all three rods thru outlet section (4). Place one mylar shim (14) over each tie rod pushing them down onto the outlet section.
9. Install a valve section (7) over tie rods. Replace the o-rings (5) and mylar shims (14) on this section.
10. Repeat step nine as required for valve assemblies having more than one valve.
11. Install the inlet section (13). Place mounting bracket over lower tie rods and install hex nuts (1). Place flat washer (2) over top tie rod and install hex nut (1).
12. Torque tie rods in three steps of 75 inch lbs., 100 inch lbs., and finally 125 inch lbs.

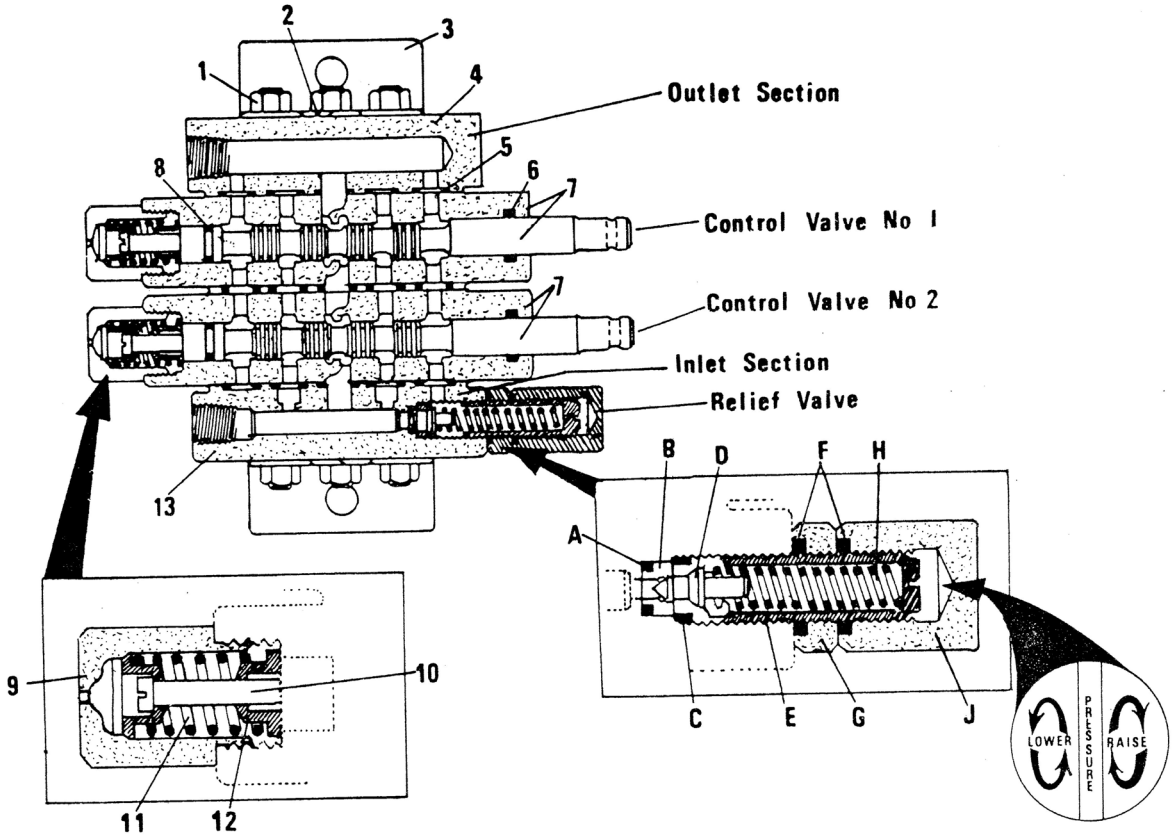

CONTROL VALVE ASSEMBLY

ITEM	DESCRIPTION	PART NO.
1.	Nut, Hex	1053
2.	Washer	1054
3.	Bracket	1056
4.	Outlet Section	1057
5.	O-ring	1058
6.	O-ring	1059
7.	Valve Section	
8.	O-ring	1058
9.	Spring Cap	1061
10.	Spring Shaft	1062
11.	Spring	1063
12.	Spring Guide	1064
13.	Inlet Section	1065
14.	Mylar Shim (Not Shown)	1079
15.	Seal Kit, Control Valve	1060
16.	Banking Kit, 2 Section	1075

ITEM	DESCRIPTION	PART NO.
A.	O-ring	1058
B.	Seat	1066
C.	Retainer	1067
D.	Poppet	1068
E.	Adjusting Screw	1069
F.	O-ring	1070
G.	Jam Nut	1071
H.	Spring	1072
J.	Cap Nut	1073
K.	Seal Kit, Relief Valve	1077
L.	Repair Kit, Relief Valve	1078

BACKHOE SERIAL NUMBER REQUIRED ON ALL PARTS ORDERS.

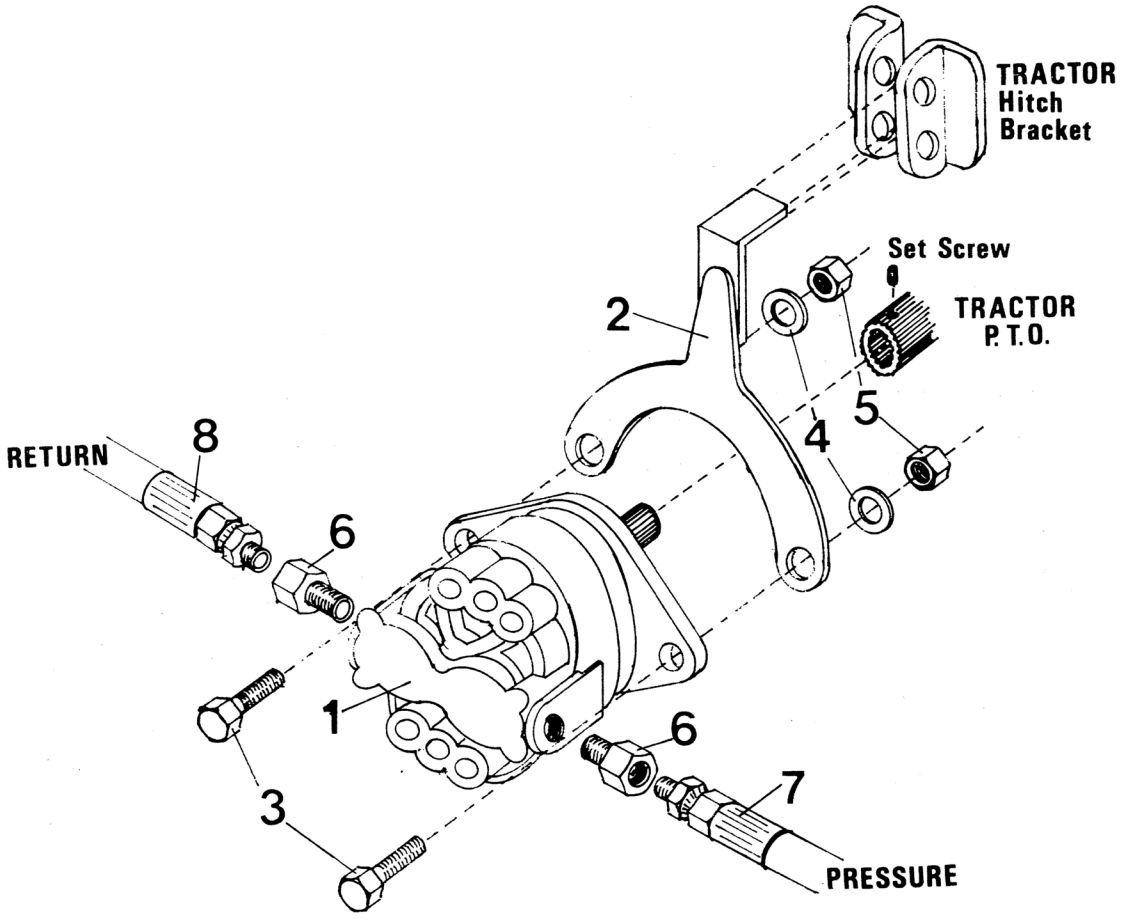

P603 PUMP ASSEMBLY

ITEM	DESCRIPTION	PART NUMBER	QUANTITY
1.	Pump, Hydraulic	667	1
2.	Yoke, Pump	673	1
3.	Bolt, Machine	5/16 x 1	2
4.	Washer, Lock	5/16	2
5.	Nut, Hex	5/16	2
6.	Reducer	724	2
7.	Hose, Pressure	722	1
8.	Hose, Return	723	1

BACKHOE SERIAL NUMBER REQUIRED ON ALL PARTS ORDERS.

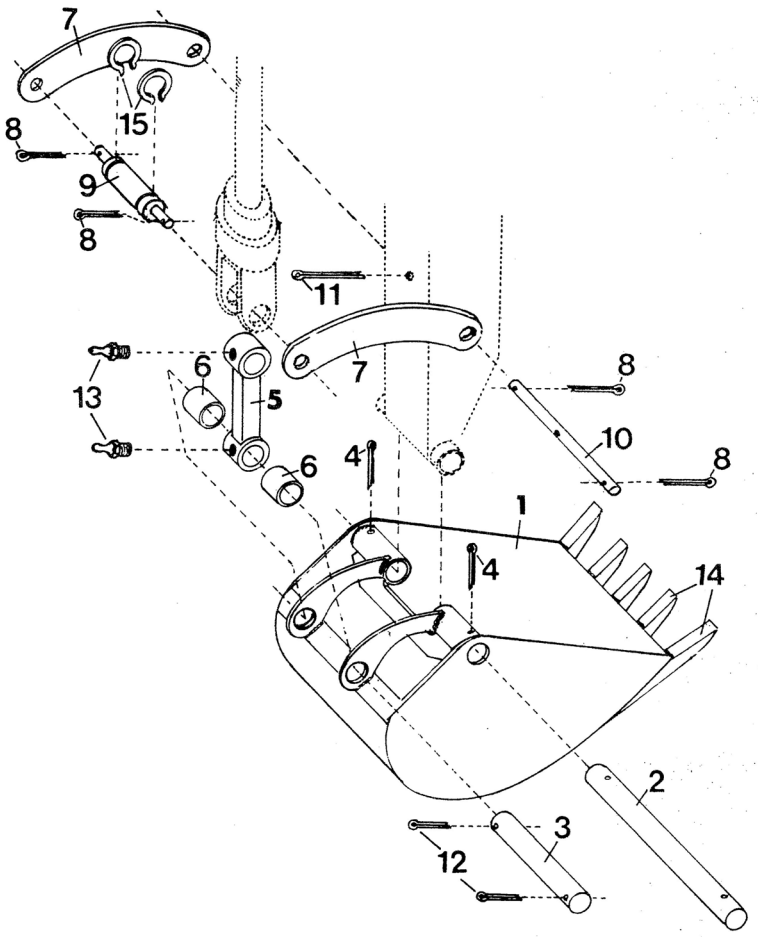

BUCKET ASSEMBLY

ITEM	DESCRIPTION	PART NUMBER	QUANTITY
1.	Bucket, 8 inch	615	1
	Bucket, 13 inch (optional)	615A	
	Bucket, 16 inch (optional)	615B	
2.	Pin, Bucket Swivel	645	1
3.	Pin, Link, Lower Bucket	622	1
4.	Pin, Cotter	3/16 x 2	2
5.	Link, Bucket	614	1
6.	Bushing, Link, Lower	646	2
7.	Arm, Toggle Link	613	2
8.	Pin, Cotter	3/16 x 1 ½	2
9.	Pin, Link, Upper Bucket	621	1
10.	Pin, Toggle Arm	647	1
11.	Pin, Cotter	3/16 x 3	1
12.	Pin, Cotter	3/16 x 2 ½	2
13.	Zert, Grease	648	2
14.	Tooth, Bucket	620	3 (8")
			6 (13")
			7 (16")
15.	Clip, C-Ring	649	2

BACKHOE SERIAL NUMBER REQUIRED ON ALL PARTS ORDERS.

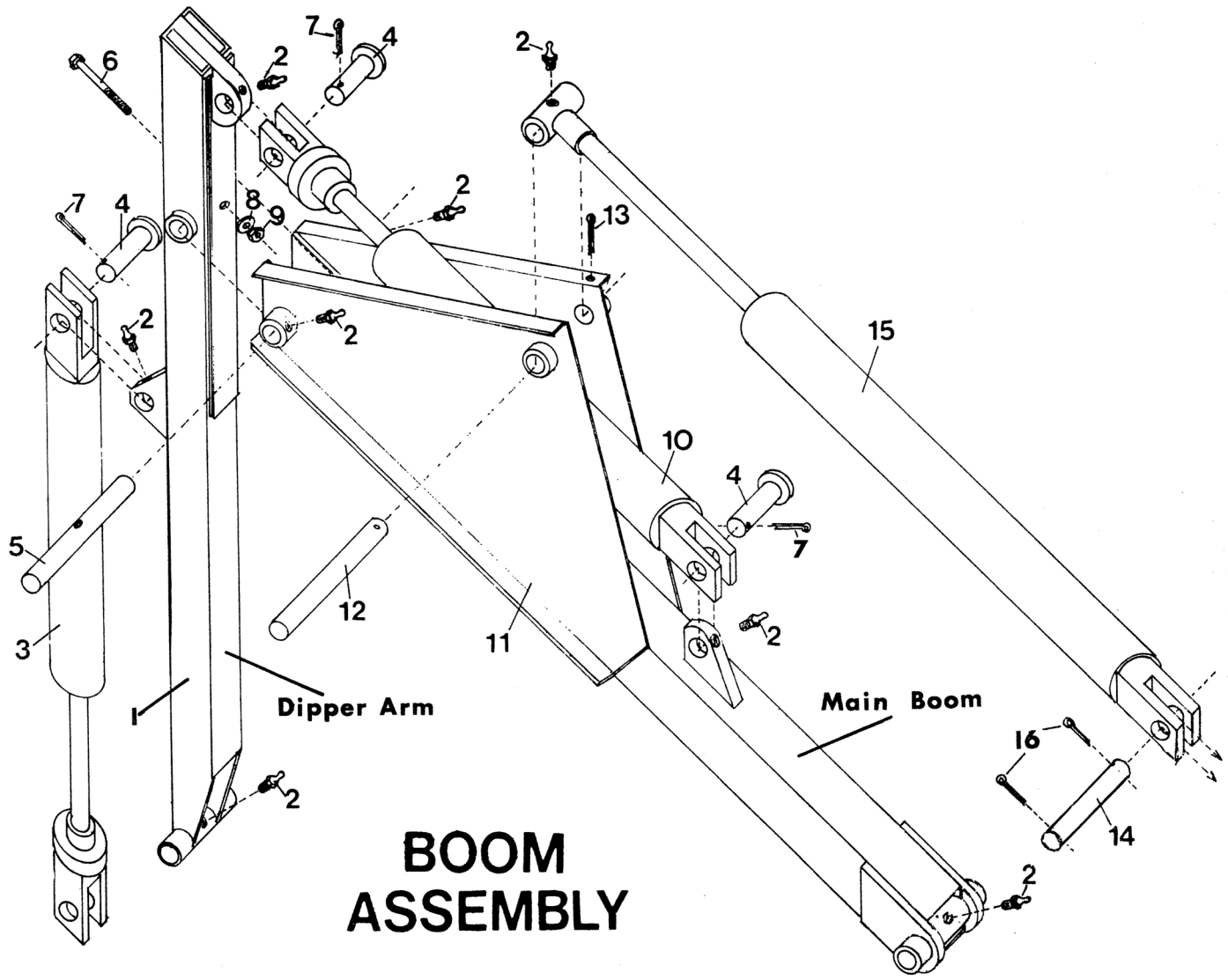

BOOM ASSEMBLY

ITEM	DESCRIPTION	PART NUMBER	QUANTITY
1.	Boom, Dipper	612	1
2.	Zert, Grease	648	8
3.	Cylinder, Hydraulic, Bucket	609	1
4.	Pin, Cylinder	650	3
5.	Pin, Dipper Swivel	651	1
6.	Bolt, Machine	1/4 x 5	1
7.	Pin, Cotter	3/16 x 1 ½	3
8.	Washer, Flat	1/4	1
9.	Nut, Hex	1/4	1
10.	Cylinder, Hydraulic, Dipper	607	1
11.	Boom, Main	611	1
12.	Pin, Boom Cylinder	652	1
13.	Pin, Cotter	3/16 x 2 ½	1
14.	Pin, Main Boom Swivel	653	1
15.	Cylinder, Hydraulic, Boom	608	1
16.	Pin, Cotter	1/8 x 1 ½	2

BACKHOE SERIAL NUMBER REQUIRED ON ALL PARTS ORDERS.

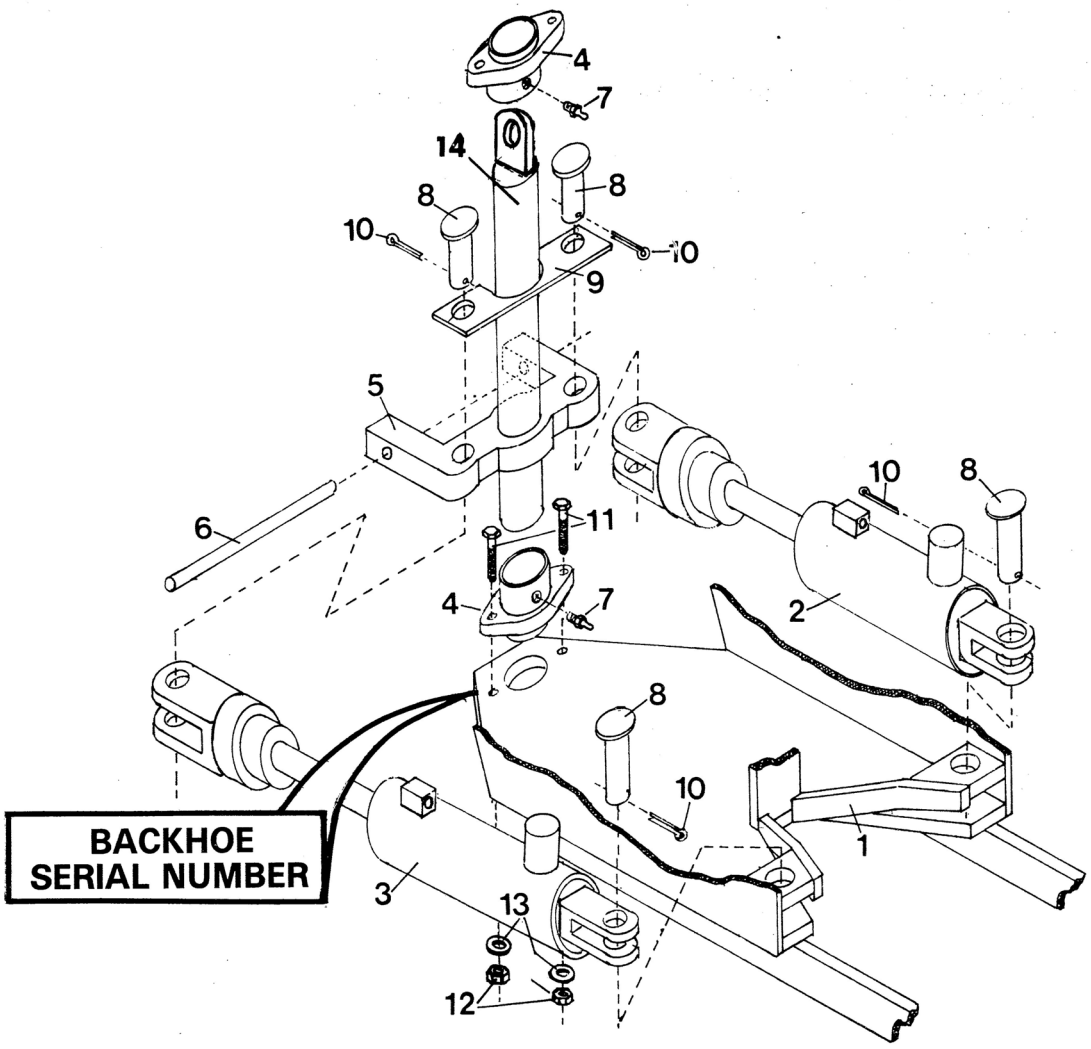

MAINFRAME ASSEMBLY (LOWER)

ITEM	DESCRIPTION	PART NUMBER	QUANTITY
1.	Housing, Mainframe	610	1
2.	Cylinder, Hydraulic, Left	606	1
3.	Cylinder, Hydraulic, Right	605	1
4.	Bearing, Shaft	617	2
5.	Collar, Boom Attaching	654	1
6.	Pin, Boom Swivel	655	1
7.	Zert, Grease	648	2
8.	Pin, Cylinder	650	4
9.	Plate, Pin Bearing	656	1
10.	Pin, Cotter	3/16 x 1 ½	4
11.	Bolt, Machine	5/16 x 1 ½	2
12.	Nut, Hex	5/16	2
13.	Washer, Lock	5/16	2
14.	Shaft, Boom Swivel	619	1

BACKHOE SERIAL NUMBER REQUIRED ON ALL PARTS ORDERS.

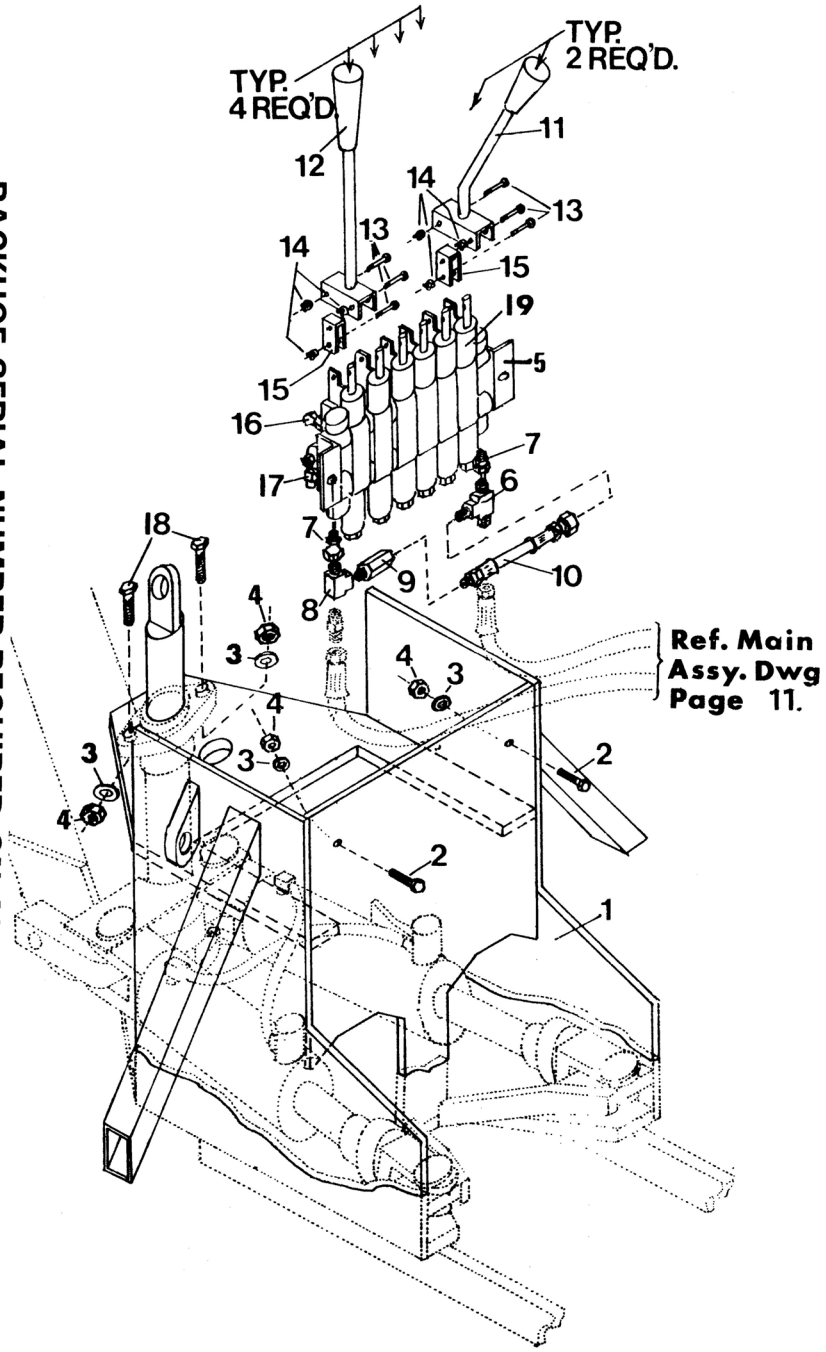

MAINFRAME ASSEMBLY (UPPER)

ITEM	DESCRIPTION	PART NUMBER	QUANTITY
1.	Housing, Mainframe (REF.)	610	1
2.	Bolt, Machine	5/16 x 1	2
3.	Washer, Lock	5/16	4
4.	Nut, Hex	5/16	4
5.	Valve Assembly, Hydraulic	657	1
6.	Connector, Tee, M-M-M	658	1
7.	Adapter, Connector	659	2
8.	Connector, Tee, M-F-F	660	1
9.	Adapter, Connector	661	1
10.	Hose, Crossover	639	1
11.	Handle, Control, Stabalizer	642	2
12.	Handle, Control, Standard	644	4
13.	Pin, Handle, C-Ring	662	18
14.	Clip, C-Ring	663	18
15.	Link, Handle	664	6
16.	Connector, 45 Degree	665	6
17.	Connector, 90 Degree	666	6
18.	Bolt, Machine	5/16 x 1 ½	2
19.	Valve, Hydraulic Control (Included in Item 5, above)	721	6

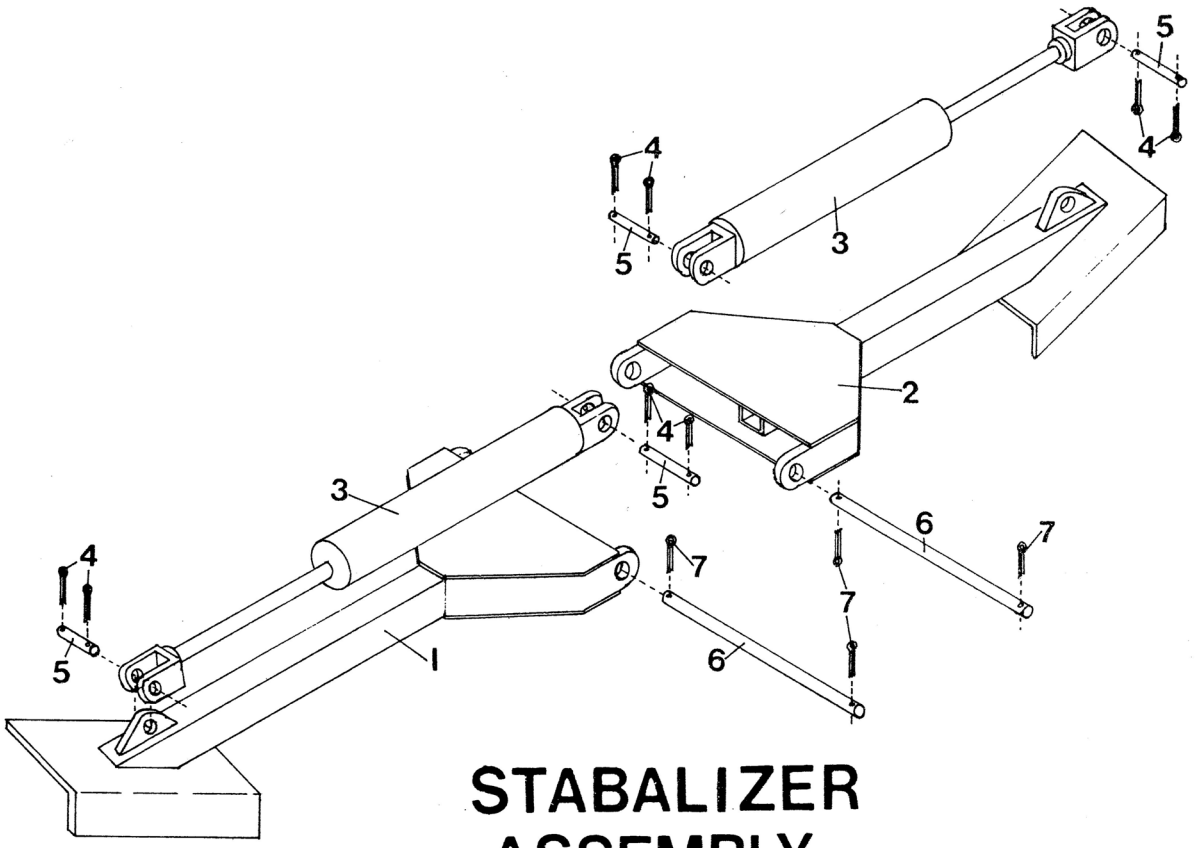

STABALIZER ASSEMBLY

ITEM	DESCRIPTION	PART NUMBER	QUANTITY
1.	Stabalizer, Right	601	1
2.	Stabalizer, Left	602	1
3.	Cylinder, Hydraulic, Stabalizer	603	2
4.	Pin, Cotter	1/8 x 1	8
5.	Pin, Cylinder	604	4
6.	Pin, Stabalizer	667	2
7.	Pin, Cotter	3/16 x 1 1/2	4

BACKHOE SERIAL NUMBER REQUIRED ON ALL PARTS ORDERS.

BACKHOE SERIAL NUMBER REQUIRED ON ALL PARTS ORDERS.

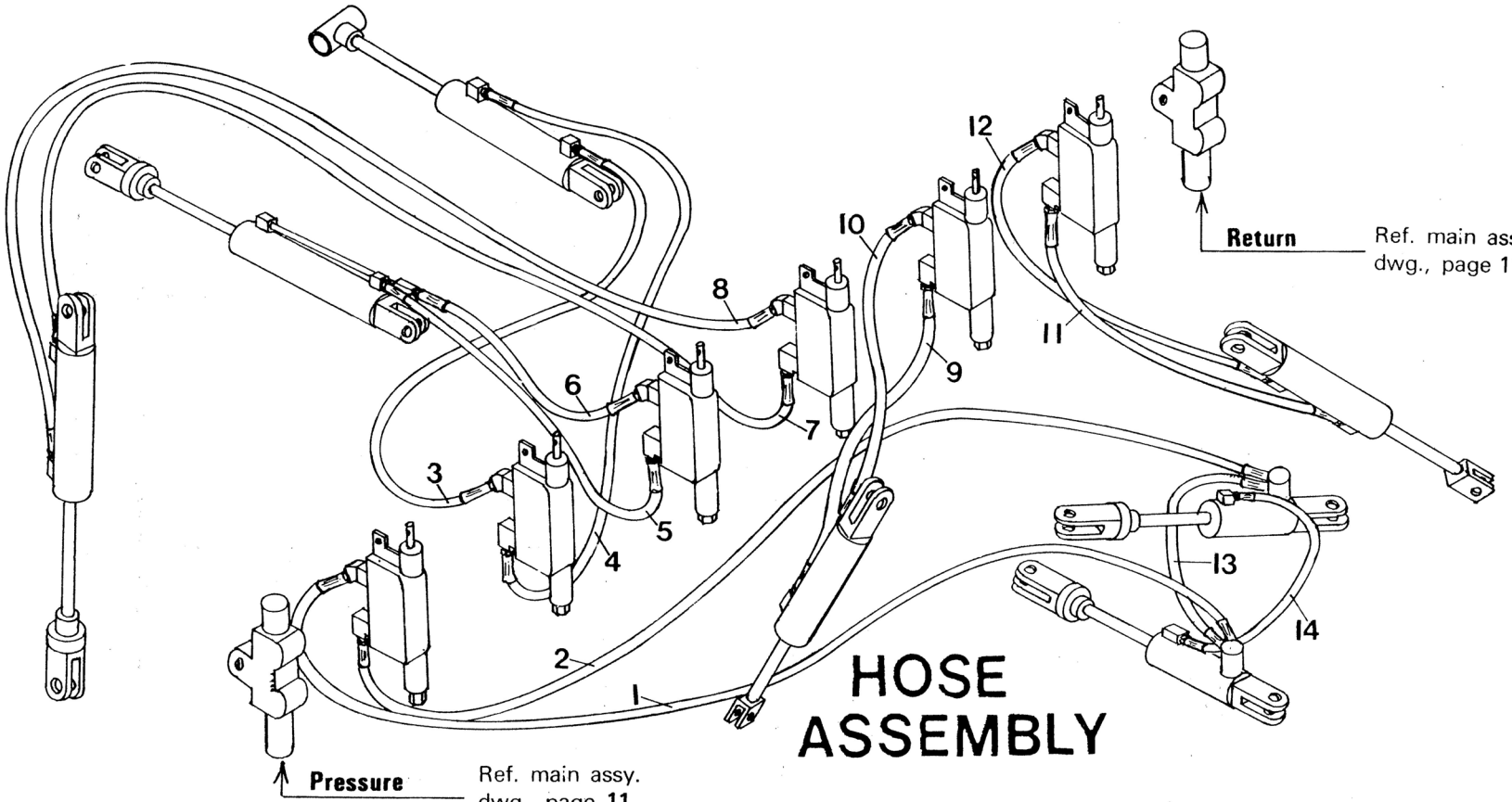

HOSE ASSEMBLY

ITEM	DESCRIPTION	PART NUMBER	LENGTH	QUANTITY
1.	Hose, Left Swing	631	21 inches (53.34 cm)	1
2.	Hose, Right Swing	624	19 inches (48.26 cm)	1
3.	Hose, Boom Down	632	24 inches (60.96 cm)	1
4.	Hose, Boom Up	625	49 inches (124.46 cm)	1
5.	Hose, Dipper Up	626	49 inches (124.46 cm)	1
6.	Hose, Dipper Down	633	49 inches (124.46 cm)	1
7.	Hose, Bucket Open	628	117 inches (297.18 cm)	1
8.	Hose, Bucket Closed	635	103 inches (261.62 cm)	1
9.	Hose, Right Stabalizer Up	627	18 inches (45.72 cm)	1
10.	Hose, Right Stabalizer Down	638	13 inches (33.02 cm)	1
11.	Hose, Left Stabalizer Up	629	12 inches (30.48 cm)	1
12.	Hose, Left Stabalizer Down	634	18 inches (45.72 cm)	1
13.	Hose, Left Swing Cylinder	640	15 inches (38.70 cm)	1
14.	Hose, Right Swing Cylinder	641	15 inches (38.70 cm)	1

BRANTLY MFG. CO.

LIMITED WARRANTY

FOR 90 DAYS FROM DATE of delivery to original purchaser, BRANTLY MFG. CO. will replace for that original purchaser, free of charge, any part or parts found upon examination by a Factory Authorized Service Center and /or the Factory at Frederick, Oklahoma to be defective in material or workmanship of both.

All travel and transportation charges incurred in providing warranty service, and on parts or complete assemblies submitted for replacement under this warranty, must be borne by the purchaser.

This warranty is not a service guarantee, nor is it any assurance that the product is perfectly designed or perfectly built; neither is it an expression of any belief that the product cannot be improved. Further, this warranty is not a guarantee against hazards such as wear, tear, misuse or misfortune nor against problems arising from incorrect set-up or servicing and it is not a guarantee that the performance will meet the expectations of the purchaser.

This warranty is void should the product be repaired or modified in any way not authorized by BRANTLY MFG. CO.

There is no other express warranty. Implied warranties, including those of merchantability and fitness for a particular purpose, are limited to 90 days from delivery to the original purchaser, and to the extent permitted by law any and all implied warranties are excluded. This is the exclusive remedy, and liability for consequential damages under any and all warranties are excluded to the extent exclusion is permitted by law.

Serial number required on ALL parts orders; record it before you forget!

(See page 17 for S/N location)

Backhoe Serial Number: .....

Dealer's Name: .....

Dealer's Address: .....

Date Purchased: .....

Telephone No.: .....

Printed in U.S.A.

JULY '76